For definitive product information, please refer to the *Technical Specifications*.

PANEL FRONT MOUNTED RECEPTACLE

GENERAL INFORMATIONS

Part number	137542
Designation	UR03W11 F019P BK1 E1NB
Product line	UltiMate™ Series
Series size	11
Connector type	Receptacle
Body style design	Front-projecting
Housing material	Brass
Housing color	Anthracite
Contact termination	PCB
Contact gender	Female
Contact configuration	Multipole low voltage
Locking system	Plug-related
Mounting type	Panel Front Mounted
Cable diameter (min - max) *[mm]*	-
Panel cut-out diameter *[mm]*	16.1
Data protocol compliance	Audio/Video up to 18Gbit/s

Picture for illustration purpose only.
Contact configuration may vary- refer to pin layout.

DIMENSIONS

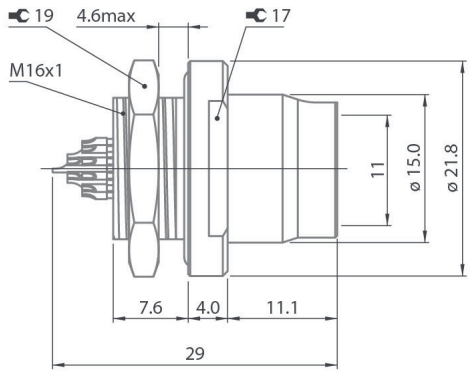

KEYING CODE

PIN LAYOUT

All dimensions and images shown are in millimeters and are for reference only.

ELECTRICAL & CONTACT CONFIGURATION

Number of contacts	Contact type	Insultator material	Contact Ø *[mm]*	Pin Ø *[mm]*	Ground pin Ø *[mm]*	Wire size min *[AWG]*	Wire size max *[AWG]*	Test voltage AC r.m.s *[kV] in mated position*		Test voltage DC *[kV] in mated position*		Current per contact *[A]*
								Contact to body	Contact to contact	Contact to body	Contact to contact	
19	Multipole low voltage	PBT	0.5	0.4	0.7	-	-	1.2	0.9	2	1.5	2.5

ENVIRONMENTAL & MECHANICAL DATA

Characteristic	Value	Standard
Sealing performance	IP68/IP69 unmated	IEC 60529 (-2m/24h)
Operation temperature	From -55 °C to 135 °C	IEC 60068-2-14-Nb
Corrosion resistance	Salt mist, 1000 hours ; 5% salt solution, 35°C	IEC 60068-2-11 Test Ka // MIL-STD-202 Method 101 Condition A // EIA-364-26
Endurance	10’000	IEC 60512-9-1 // EIA-364-09
Vibration resistance	37,80 Grms	MIL-STD-202 Method 214A Condition I // EIA-364-28 Condition V
Shock resistance	300g amplitude, half sine pulse of 3 ms, no discontinuity > 1 µs	MIL-STD-202 Method 213 // EIA-364-27