For definitive product information, please refer to the *Technical Specifications*.

PANEL REAR MOUNTED RECEPTACLE FRONT-PROJECTING

GENERAL INFORMATIONS

Part number	137019
Designation	UR01W15 F027S BK1 E2AB
Product line	UltiMate™ Series
Series size	15
Connector type	Receptacle
Body style design	Front-projecting
Housing material	Brass
Housing color	Anthracite
Contact termination	Solder
Contact gender	Female
Contact configuration	Multipole low voltage
Locking system	Plug-related
Mounting type	Panel Rear Mounted
Cable diameter (min - max) *[mm]*	6.9 - 11.3
Panel cut-out diameter *[mm]*	20.1
Data protocol compliance	-

Picture for illustration purpose only.
Contact configuration may vary- refer to pin layout.

DIMENSIONS

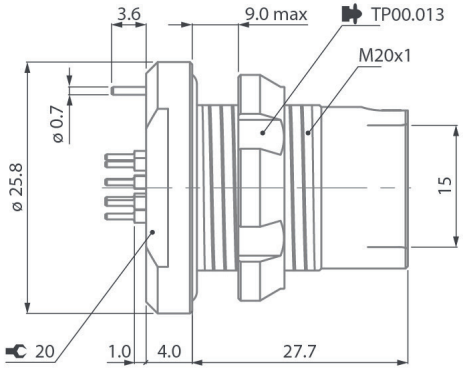

KEYING CODE

PIN LAYOUT

All dimensions and images shown are in millimeters and are for reference only.

ELECTRICAL & CONTACT CONFIGURATION

Number of contacts	Contact type	Insultator material	Contact Ø *[mm]*	Pin Ø *[mm]*	Ground pin Ø *[mm]*	Wire size min *[AWG]*	Wire size max *[AWG]*	Test voltage AC r.m.s *[kV] in mated position*		Test voltage DC *[kV] in mated position*		Current per contact *[A]*
								Contact to body	Contact to contact	Contact to body	Contact to contact	
27	Multipole low voltage	PEEK	0.7	-	-	-	21	1.2	1.5	1.5	2	3

ENVIRONMENTAL & MECHANICAL DATA

Characteristic	Value	Standard
Sealing performance	IP68/IP69	IEC 60529 (-2m/24h)
Operation temperature	From -55 °C to 135 °C	IEC 60068-2-14-Nb
Corrosion resistance	Salt mist, 1’000 hours, 5% salt solution, 35 °C	IEC 60068-2-11 Test Ka // MIL-STD-202 Method 101 // EIA-364-26
Endurance	5’000	IEC 60512-9-1
Vibration resistance	37,80 Grms	MIL-STD-202 Method 214A Condition 1 // EIA-364-28 Condition 5
Shock resistance	300g amplitude, half sine pulse of 3 ms, no discontinuity > 1 µs	MIL-STD-202 Method 213 // EIA-364-27